4GRT3CHRD

Specifications

ADJUSTABLE SLIDE BAR WITH HAND HELD SHOWER ASSEMBLY

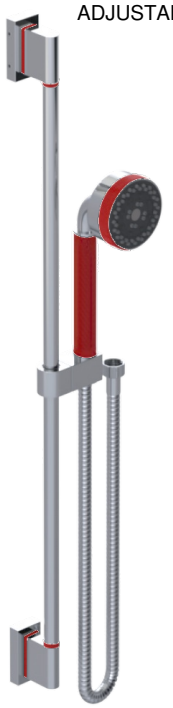

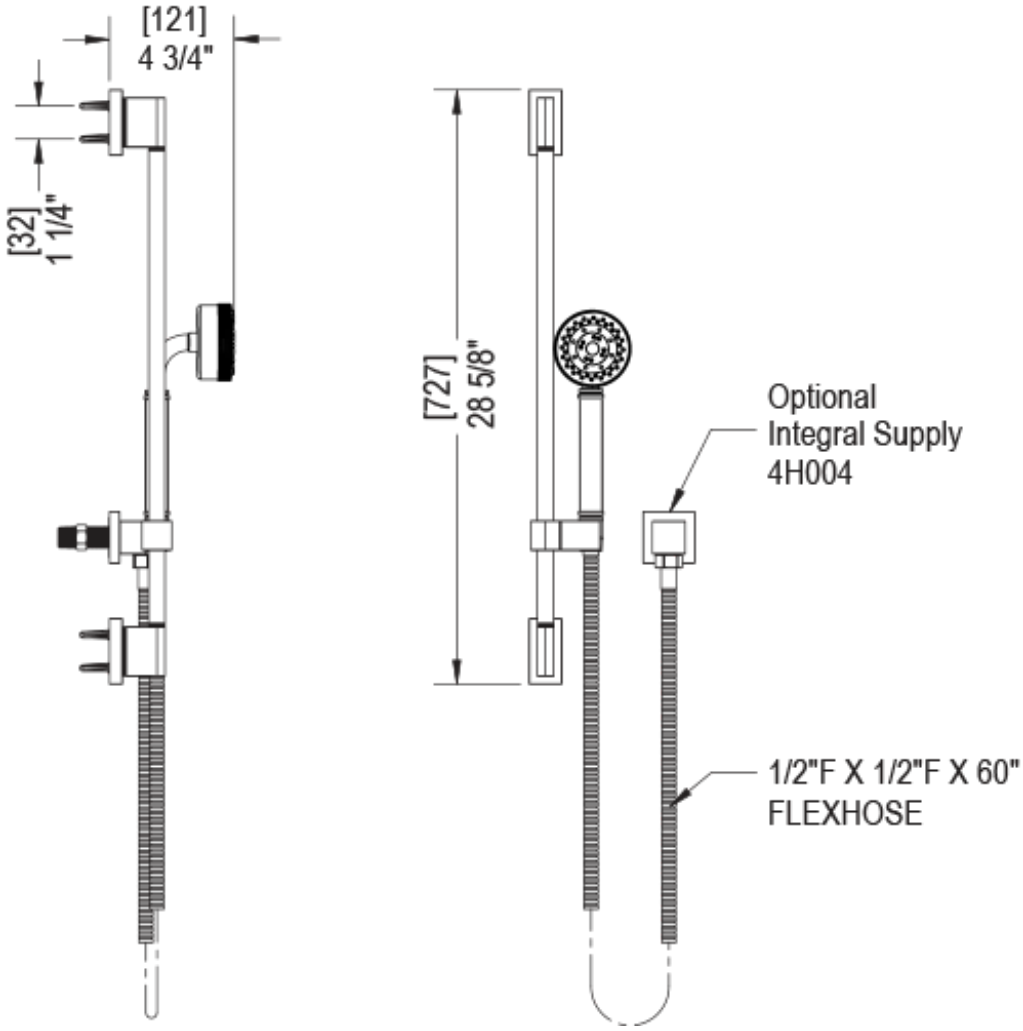

Tel: 905-851-6780
Fax: 905-851-8031
Toll Free: 800-461-5901