AXOR

AXOR Universal Accessories
Toilet Brush with Holder Wall-Mounted
Finishes : **chrome** Part no. : **42835000**

Description

Features

- Glass, Metal
- Wall-mounted

Design awards

DESIGN AWARD 2015

reddot award 2015 winner

Focus Open 2015 Silver

Product image
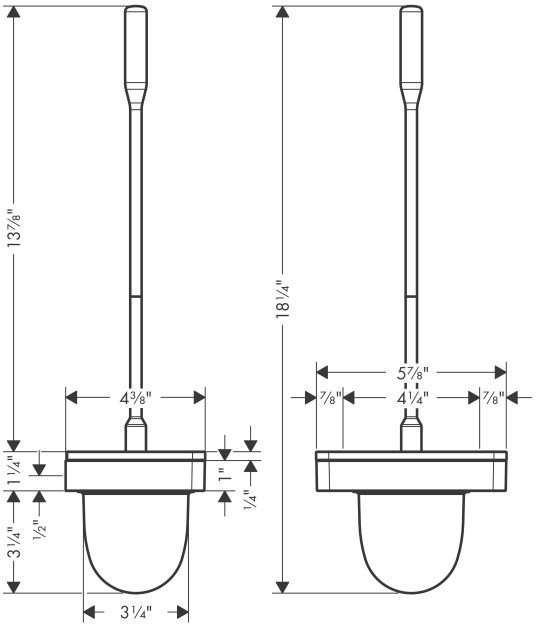
Scale drawing